BEAR RIVER BAND OF ROHNERVILLE RANCHERIA

BEAR RIVER TOBACCO TRADERS

LOLETA, CALIFORNIA

PREPARED BY:

SHN

NOVEMBER 2013

LOCATION MAP

NTS

APPROVALS

DAKOTA MCGINNIS — DATE
BEAR RIVER BAND OF ROHNERVILLE RANCHERIA
INTERIM TRIBAL CHAIRMAN

EDWIN SMITH — DATE
BEAR RIVER BAND OF ROHNERVILLE RANCHERIA
ENVIRONMENTAL COORDINATOR

JARED S. O'BARR — DATE
SHN CONSULTING ENGINEERS AND GEOLOGISTS
PROJECT ENGINEER

INDEX OF SHEETS

SEQ	SHEET	TITLE
1	G-1	COVER
2	G-2	STANDARD ABBREVIATIONS AND LEGENDS
3	G-3	GENERAL NOTES
4	C-1	SITE PLAN
5	C-2	GRADING PLAN
6	C-3	UTILITY PLAN
7	C-4	DETAILS
8	C-5	DETAILS
9	C-6	DETAILS

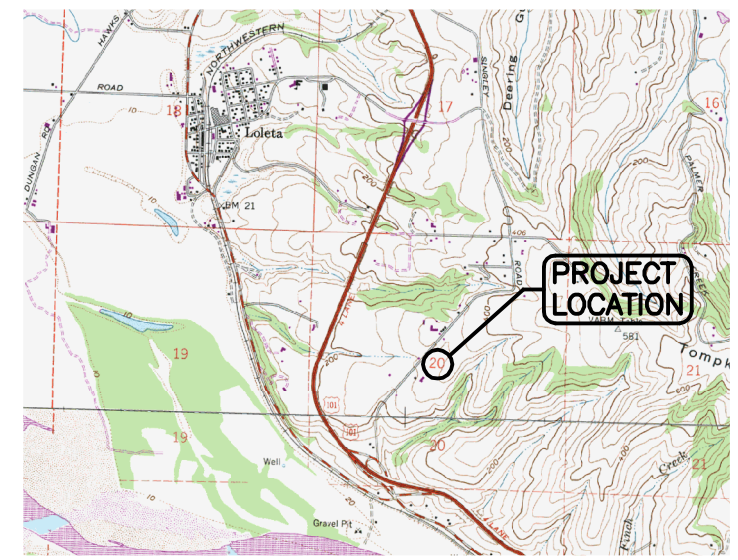

VICINITY MAP

NTS

PRELIMINARY

VERIFY SCALES
BAR IS ONE INCH ON ORIGINAL DRAWING
0 1"
IF NOT ONE INCH ON THIS SHEET, ADJUST SCALES ACCORDINGLY

SHN CONSULTING ENGINEERS & GEOLOGISTS, INC.
812 W. WABASH AVE. EUREKA, CA. 95501
WWW.SHN-ENGR.COM 707-441-8855

NO.	DATE	REVISION	BY

DSGN JSO
DR NMD
CHK TJT
APVD

BEAR RIVER BAND OF ROHNERVILLE RANCHERIA
BEAR RIVER TOBACCO TRADERS
LOLETA, CALIFORNIA

COVER

SHEET G-1
SEQ 1
DATE 11/2013
PROJ. NO. 013144

SAVED: 11/4/2013 3:56 PM NDOWNEY, PLOTTED: 11/4/2013 4:56 PM JARED O'BARR
\\Eureka\projects\2013\013144-Tish-Non-Tobacco\Dwgs\013144-COVER.dwg

ABBREVIATIONS

A

ABN	—	ABANDON
ABS	—	ACRYLONITRILE–BUTADIENE–STYRENE
AB	—	ANCHOR BOLT, AGGREGATE BASE
AC	—	ASPHALTIC CONCRETE
ACP	—	ASBESTOS CEMENT PIPE
ACI	—	AMERICAN CONCRETE INSTITUTE
ADJ	—	ADJUSTABLE
AGGR	—	AGGREGATE
AISC	—	AMERICAN INSTITUTE OF STEEL CONSTRUCTION
AL	—	ALUMINUM
ALT	—	ALTERNATE
APPROX	—	APPROXIMATELY
ARCH	—	ARCHITECTURAL
ASTM	—	AMERICAN SOCIETY FOR TESTING & MATERIALS
AUTO	—	AUTOMATIC
AUX	—	AUXILIARY
@	—	AT

B

BC	—	BEGIN CURVE
BCR	—	BEGIN CURB RETURN
BD	—	BOARD
BF	—	BLIND FLANGE
BFV	—	BUTTERFLY VALVE
BK	—	BOOK OR BACK
BLDG	—	BUILDING
BM	—	BENCH MARK, BEAM
BOT	—	BOTTOM
BRG	—	BEARING
BTWN	—	BETWEEN
BV	—	BALL VALVE
BVC	—	BEGINNING OF VERTICAL CURVE
BW	—	BACK OF WALK
BWW	—	BACKWASH WATER

C

C	—	CHANNEL (STRUCTURAL SHAPE)
CATV	—	CABLE TELEVISION
CB	—	CATCH BASIN
CEIL	—	CEILING
CFM	—	CUBIC FEET PER MINUTE
CFS	—	CUBIC FEET PER SECOND
CHEM	—	CHEMICAL
CI	—	CAST IRON
CIP	—	CAST IRON PIPE
C.I.P.	—	CAST IN PLACE
CJ	—	CONSTRUCTION JOINT
CL2	—	CHLORINE
CLR	—	CLEAR
℄	—	CENTERLINE
CMP	—	CORRUGATED METAL PIPE
CMU	—	CONCRETE MASONRY UNIT
CTSK	—	COUNTERSINK
CO	—	CLEANOUT
COL	—	COLUMN
CONC	—	CONCRETE
CONT	—	CONTINUOUS OR CONTINUED
COORD	—	COORDINATE
CPLG	—	COUPLING
CRS	—	COLD ROLLED STEEL
CTR	—	CENTER
CU	—	CUBIC
CU FT	—	CUBIC FEET
CV	—	CHECK VALVE
CW	—	COLD WATER
CY	—	CUBIC YARD

D

°	—	DEGREE (ANGLE)
d	—	PENNY (NAIL SIZE)
DB	—	DISTRIBUTION BOX
DBL	—	DOUBLE
DF	—	DOUGLAS FIR
DI	—	DROP INLET OR DUCTILE IRON
DIA	—	DIAMETER
DIAG	—	DIAGONAL
DIM	—	DIMENSION
DIMJ	—	DUCTILE IRON MECHANICAL JOINT
DIP	—	DUCTILE IRON PIPE
DET	—	DETAIL
DWG	—	DRAWING
D/W	—	DRIVEWAY

E

(E)	—	EXISTING
EA	—	EACH
EC	—	END CURVE
ECR	—	END CURB RETURN
EF	—	EACH FACE
EFL	—	EFFLUENT
EL	—	ELBOW
ELEC	—	ELECTRIC OR ELECTRICAL
ELEV	—	ELEVATION
ENGR	—	ENGINEER
EP	—	EDGE OF PAVING
EQ	—	EQUAL
EQUIP	—	EQUIPMENT
ER	—	EDGE OF ROAD
EVC	—	END OF VERTICAL CURVE
EW	—	EACH WAY
EWEF	—	EACH WAY, EACH FACE
EXC	—	EXCAVATE
EXP	—	EXPOSED OR EXPANSION
EXP JT	—	EXPANSION JOINT
EXST	—	EXISTING
EXT	—	EXTERIOR

F

FC	—	FLEXIBLE COUPLING OR FACE OF CURB
FCA	—	FLANGED COUPLING ADAPTER
FD	—	FLOOR DRAIN
FDN	—	FOUNDATION
FF	—	FINISH FLOOR
FG	—	FINISHED GRADE
FH	—	FIRE HYDRANT
FIG	—	FIGURE
FIN	—	FINISH
FL	—	FLOW LINE
FLG	—	FLANGE
FLR	—	FLOOR
FLTR	—	FILTER
FOC	—	FACE OF CONCRETE
FT	—	FOOT OR FEET
FT^2	—	SQUARE FEET
FT^3	—	CUBIC FEET
FTG	—	FOOTING
FW	—	FINISH WATER

G

G	—	GAS
GA	—	GAGE
GALV	—	GALVANIZED
GIP	—	GALVANIZED IRON PIPE
GPD	—	GALLONS PER DAY
GPH	—	GALLONS PER HOUR
GPM	—	GALLONS PER MINUTE
GRD	—	GRADE OR GROUND
GSP	—	GALVANIZED STEEL PIPE
GV	—	GATE VALVE
GYP	—	GYPSUM

H

HB	—	HOSE BIBB
HDR	—	HEADER
HDW	—	HARDWARE
HP	—	HORSEPOWER, HIGH POINT
HORIZ	—	HORIZONTAL
HR	—	HOUR
HT	—	HEIGHT
HW	—	HOT WATER
HWR	—	HOT WATER RETURN
HWS	—	HOT WATER SUPPLY

I

ID	—	INSIDE DIAMETER
IN	—	INCH
INFL	—	INFLUENT
INSUL	—	INSULATE OR INSULATION
INT	—	INTERIOR
INV	—	INVERT

J

JT	—	JOINT
JP	—	JOINT POLE

K

KIP	—	THOUSAND POUNDS
KW	—	KILOWATT

L

∠	—	ANGLE (DEGREES)
L	—	ANGLE (STRUCTURAL SHAPE)
LB	—	POUND
LF	—	LINEAR FEET
LG	—	LONG
LH	—	LEFT HAND
LP	—	LOW POINT
LPG	—	LIQUIFIED PETROLEUM GAS
LR	—	LONG RADIUS
LT	—	LEFT
LONG	—	LONGITUDINAL

M

MATL	—	MATERIAL
MAX	—	MAXIMUM
MECH	—	MECHANICAL
MF	—	MEGA–FLANGE PIPE JOINT
MFR	—	MANUFACTURER
MGD	—	MILLION GALLONS PER DAY
MH	—	MANHOLE
MIN	—	MINIMUM OR MINUTE
MISC	—	MISCELLANEOUS
MJ	—	MECHANICAL JOINT
MTL	—	METAL
MWS	—	MAXIMUM WATER SURFACE

N

(N)	—	NEW
NC	—	NORMALLY CLOSED
NIC	—	NOT IN CONTRACT
NF	—	NON–FREEZE
NO	—	NUMBER OR NORMALLY OPEN
NOM	—	NOMINAL
NPT	—	NATIONAL PIPE THREAD
NTS	—	NOT TO SCALE
#	—	NUMBER

O

OC	—	ON CENTER
OD	—	OUTSIDE DIAMETER
OG	—	ORIGINAL GROUND
OVFL	—	OVERFLOW
OZ	—	OUNCE
OH	—	OVERHEAD

P

PC	—	POINT OF CURVE
PCF	—	POUNDS PER CUBIC FOOT
PE	—	PLAIN END
PERF	—	PERFORATED
PEP	—	POLYETHELENE PIPE
PI	—	POINT OF INTERSECTION
PL	—	PLATE
PL	—	PROPERTY LINE
PLCS	—	PLACES
PLYWD	—	PLYWOOD
PMP	—	PERFORATED METAL PIPE
PO	—	POLYMER
POC	—	POINT ON CURVE
PP	—	POWER POLE
PRC	—	POINT OF REVERSE CURVE
PREFAB	—	PREFABRICATED
PRELIM	—	PRELIMINARY
PRESS	—	PRESSURE
PROP	—	PROPERTY
PSF	—	POUNDS PER SQUARE FOOT
PSI	—	POUNDS PER SQUARE INCH
PSIG	—	POUNDS PER SQUARE INCH, GAUGE
PT	—	POINT OF TANGENCY, POINT
PV	—	PLUG VALVE
PVC	—	POLYVINYL CHLORIDE PLASTIC
PVMT	—	PAVEMENT

Q

QTY	—	QUANTITY

R

R	—	RADIUS
RCP	—	REINFORCED CONCRETE PIPE
RD	—	ROAD
RDCR	—	REDUCER
RWD	—	REDWOOD
REF	—	REFER OR REFERENCE
REINF	—	REINFORCED, REINFORCING OR REINFORCE
REQD	—	REQUIRED
RET	—	RETURN
RH	—	RIGHT HAND
RM	—	ROOM
RO	—	ROUGH OPENING
RSP	—	ROCK SLOPE PROTECTION
RT	—	RIGHT OR RING TIGHT
R/W	—	RIGHT OF WAY
RW	—	RAW WATER
RWL	—	RAIN WATER LEADER

S

S	—	SEWER
SL	—	SLOPE
SCHED	—	SCHEDULE
SD	—	STORM DRAIN
SECT	—	SECTION
SHT	—	SHEET
SIM	—	SIMILAR
SP	—	SPACE OR SPACES
SPEC	—	SPECIFICATIONS
SQ	—	SQUARE
SQ FT	—	SQUARE FOOT
SQ IN	—	SQUARE INCH
SS	—	SANITARY SEWER
SST	—	STAINLESS STEEL
STA	—	STATION
STD	—	STANDARD
STL	—	STEEL
STR	—	STRUCTURAL
STRUCT	—	STRUCTURE
SUSP	—	SUSPENDED
SYMM	—	SYMMETRICAL

T

TAN	—	TANGENT
T&B	—	TOP AND BOTTOM
T&G	—	TONGUE AND GROOVE
TBM	—	TEMPORARY BENCH MARK
TC	—	TOP OF CURB
TCE	—	TEMPORARY CONSTRUCTION EASEMENT
TEL	—	TELEPHONE
TELEM	—	TELEMETRY
TEMP	—	TEMPERATURE OR TEMPORARY
THD	—	THREAD
TOC	—	TOP OF CONCRETE
TOG	—	TOP OF GRATE
TOW	—	TOP OF WALL
TP	—	TURNING POINT, TOP OF PAVEMENT OR TELEPHONE POLE
TRANSV	—	TRANSVERSE
TS	—	TUBE, STRUCTURAL
TYP	—	TYPICAL

U

UBC	—	UNIFORM BUILDING CODE
UOS	—	UNLESS OTHERWISE SPECIFIED
UG	—	UNDERGROUND
UTIL	—	UTILITY

V

V	—	VOLT
VAC	—	VACUUM
VC	—	VERTICAL CURVE
VCP	—	VITRIFIED CLAY PIPE
VERT	—	VERTICAL
VPI	—	VERTICAL POINT OF INTERSECTION

W

W	—	WATER OR WIDE FLANGE
W/	—	WITH
W/O	—	WITHOUT
WP	—	WORK POINT
WS	—	WATER SURFACE, WATER STOP
WWF	—	WELDED WIRE FABRIC
W1	—	POTABLE WATER
W2	—	NON–POTABLE WATER

X

XFMR	—	TRANSFORMER

Y

YD	—	YARD
YD^2	—	SQUARE YARD
YD^3	—	CUBIC YARD

NOTES

1. CONTACT THE ENGINEER FOR SYMBOLS NOT LISTED
2. THIS IS A STANDARD SHEET, THEREFORE, SOME SYMBOLS OR ABBREVIATIONS MAY APPEAR ON THIS SHEET WHICH DO NOT APPEAR ON THE PLANS.
3. SITE AND UTILITY SYMBOLS SHOWN ON THIS SHEET ARE NOT INTENDED TO REPRESENT THE PHYSICAL SCALE OR SHAPE OF ANY ITEMS. WHERE LARGE–SCALE PLANS ARE PRESENTED, THE SYMBOLS SHOWN HEREON MAY BE REPLACED BY DETAILS MORE SUITED TO THE DRAWING SCALE.

UTILITIES LEGEND

PROPOSED	EXISTING	
		GATE VALVE
	PV	PLUG VALVE
	BV	BALL VALVE
	BFV	BUTTERFLY VALVE
P	P	AUTOMATICALLY OPERATED VALVE (P= PNEUMATIC, E= ELECTRIC, S= SOLENOID, H= HYDRAULIC, D= DIAPHRAGM ACTUATOR)
		3–WAY VALVE
		GLOBE VALVE
		ANGLE VALVE
		PRESSURE REGULATING VALVE
		PRESSURE RELIEF VALVE
		CHECK VALVE
		AIR OR VACUUM RELEASE VALVE
AV	AV	AIR AND VACUUM VALVE
CA	CA	COMBINATION AIR VALVE
		FLOW METER
	NF	HOSE BIBB (NF= NON–FREEZE)
		REDUCER
		FIRE HYDRANT
		DROP INLET
		MANHOLE
		CLEANOUT
E	E	UNDERGROUND ELECTRICAL
OH E	OH E	OVERHEAD ELECTRICAL
TV	TV	CABLE TELEVISION
J	J	JOINT UTILITIES
TM	TM	UNDERGROUND TELEMETRY LINE
OH TM	OH TM	OVERHEAD TELEMETRY LINE
T	T	UNDERGROUND TELEPHONE LINE
OH T	OH T	OVERHEAD TELEPHONE LINE
W	W	WATER LINE
SS	SS	SANITARY SEWER LINE
SD	SD	STORM DRAIN LINE
G	G	GAS LINE
FM	FM	FORCE MAIN AND DIRECTION OF FLOW
		CULVERT
		POLE MOUNTED ROADWAY LUMINAIRE
	NOT USED	ITEM TO BE REMOVED
		ITEM TO BE ABANDONED IN PLACE
		WATER SERVICE
3	PB	PULL BOX AND DESIGNATION
R4–4		SIGN AND DESIGNATION

SIZE AND MATERIAL OF EXISTING PIPING MAY BE SHOWN WHEN KNOWN.

SIZE AND MATERIAL OF NEW PIPING MAY BE SHOWN ON PLAN OR IN PROFILE.

CURVE DATA

R (RADIUS)
L (LENGTH)
Δ (DELTA)
T (TANGENT)

TOPOGRAPHIC LEGEND

PROPOSED	EXISTING	
		P.I. (POINT OF INTERSECTION)
NOT USED		TEMPORARY BENCH MARK
47.55	NOT USED	FINISH GRADE ELEVATON
NOT USED	42.6	ELEVATION OF ORIGINAL GROUND
		RADIAL POINT
		FLOW LINE AND DIRECTION
		TOP OF CUT
		TOP OF FILL
		TOE OF CUT OR FILL
200	180	CONTOUR LINE
		CONCRETE (IN PLAN)
		CONCRETE (IN SECTION)
		PAVEMENT
NOT USED		ROCKS
NOT USED		STUMPS
		TREES
		ROADS
	TP	UTILITY POLE (PP=POWER POLE, TP= TEL POLE, JP=JOINT POLE)
		GUY WIRE
		FENCE
		BOUNDARY LIMITS, W/DESIGNATION
		CENTERLINE
NOT USED		MARSH
		WETLAND
NOT USED		SPRING
TP–4	TP–4	TEST PIT AND DESIGNATION
		EXPLORATION BORE HOLE
		PROPERTY CORNER
		SURVEY MONUMENT
		CONTROL POINT
		DRIVEWAY

DETAIL AND SECTION DESIGNATION

SECTION (LETTER) OR DETAIL (NUMERAL) DESIGNATION — A

INDICATES SECTION OR DETAIL TAKEN AND SHOWN ON SAME SHEET — C–5

ON DRAWING WHERE SECTION OR DETAIL IS TAKEN: SHEET NUMBER WHERE SHOWN

ON DRAWING WHERE SECTION OR DETAIL IS SHOWN: SHEET NUMBER WHERE TAKEN

STANDARD DETAIL NUMBER (DETAIL MAY BE SHOWN ON ANY SHEET WITHIN THE DRAWING SET — 006

PRELIMINARY

VERIFY SCALES
BAR IS ONE INCH ON ORIGINAL DRAWING
0 1"
IF NOT ONE INCH ON THIS SHEET, ADJUST SCALES ACCORDINGLY

CONSULTING ENGINEERS & GEOLOGISTS, INC.
812 W. WABASH AVE.
EUREKA, CA. 95501
WWW.SHN-ENGR.COM
707-441-8855

NO.	REVISION	DATE	BY

DSGN KJN
DR CDN
CHK KJN
APVD

BEAR RIVER BAND OF ROHNERVILLE RANCHERIA
BEAR RIVER TOBACCO TRADERS
LOLETA, CALIFORNIA

STANDARD ABBREVIATIONS AND LEGENDS

SHEET G–2
SEQ 2
DATE 11/2013
PROJ. NO. 013144

SAVED: 11/4/2013 3:47 PM NDOWNEY, PLOTTED: 11/4/2013 4:57 PM JARED O'BARR
\\Eureka\projects\2013\013144-Tish-Non-Tobacco\Dwgs\013144-STND-ABBR.dwg

GENERAL NOTES:

1. ALL WORK SHALL CONFORM TO CURRENT FEDERAL HIGHWAY ADMINISTRATION (FHWA) STANDARDS, AND THE CALIFORNIA BUILDING CODE.
2. THE WORKING DRAWINGS ARE GENERALLY DIAGRAMMATIC. THEY DO NOT SHOW EVERY OFFSET, BEND OR ELBOW REQUIRED FOR INSTALLATION IN THE SPACE PROVIDED. THEY DO NOT SHOW EVERY DIMENSION, COMPONENT PIECE, SECTION, JOINT OR FITTING REQUIRED TO COMPLETE THE PROJECT. ALL LOCATIONS FOR WORK SHALL BE CHECKED AND COORDINATED WITH EXISTING CONDITIONS IN THE FIELD BEFORE BEGINNING CONSTRUCTION. EXISTING UNDERGROUND UTILITIES WITHIN THE LIMITS OF EXCAVATION SHALL BE VERIFIED AS TO CONDITION, SIZE AND LOCATION BY UNCOVERING, PROVIDED SUCH IS PERMITTED BY LOCAL PUBLIC AUTHORITIES WITH JURISDICTION, BEFORE BEGINNING CONSTRUCTION. CONTRACTOR SHALL NOTIFY ENGINEER OF ANY DISCREPANCIES.
3. THE CONTRACTOR SHALL SECURE ALL NECESSARY PERMITS PRIOR TO THE COMMENCEMENT OF CONSTRUCTION.
4. THE CONTRACTOR SHALL PROVIDE A COPY OF THE TRENCH PERMIT FROM THE CALIFORNIA DIVISION OF INDUSTRIAL SAFETY PRIOR TO THE EXCAVATION OF ANY TRENCH OVER FIVE FEET IN DEPTH.
5. CONTRACTOR SHALL PERFORM TRENCH WORK IN CONFORMANCE WITH THE CALIFORNIA DIVISION OF INDUSTRIAL SAFETY REQUIREMENTS. SAID SHALL CONFORM TO ALL APPLICABLE OCCUPATIONAL SAFETY AND HEALTH STANDARDS, RULES, REGULATIONS AND ORDERS ESTABLISHED BY THE STATE OF CALIFORNIA AND OTHER APPLICABLE AGENCIES.
6. CONTRACTOR AGREES THAT IN ACCORDANCE WITH GENERALLY ACCEPTED CONSTRUCTION PRACTICES, GENERAL CONTRACTOR WILL ASSUME SOLE AND COMPLETE RESPONSIBILITY FOR JOB SITE CONDITIONS DURING THE COURSE OF CONSTRUCTION OF THE PROJECT, INCLUDING SAFETY OF ALL PERSONS AND PROPERTY. ALL WORK AND EQUIPMENT SHALL COMPLY WITH THE CALIFORNIA DIVISION OF INDUSTRIAL SAFETY REQUIREMENTS. THIS REQUIREMENT SHALL BE MADE TO APPLY CONTINUOUSLY, AND NOT BE LIMITED TO NORMAL WORKING HOURS. CONTRACTOR FURTHER AGREES TO HOLD HARMLESS, INDEMNIFY AND DEFEND THE OWNER, THE ENGINEER AND HIS/HER CONSULTANTS.
7. THE CONTRACTOR SHALL INDEPENDENTLY REVIEW GROUND, TOPOGRAPHY AND TREE CONDITIONS THROUGHOUT THE SITE, AND ASSUME THE RISK OF COMPLETING THE WORK SET OUT ON THESE PLANS, REGARDLESS OF ROCK, WATER TABLE OR OTHER CONDITIONS WHICH MAY BE ENCOUNTERED IN THE COURSE OF THE WORK.
8. ANY DISCREPANCY DISCOVERED BY THE CONTRACTOR IN THESE PLANS, OR ANY FIELD CONDITIONS DISCOVERED BY THE CONTRACTOR THAT MAY DELAY OR OBSTRUCT THE PROPER COMPLETION OF THE WORK SHOWN HEREIN SHALL BE BROUGHT TO THE ATTENTION OF THE OWNER AND THE ENGINEER IMMEDIATELY UPON DISCOVERY. SAID NOTIFICATION SHALL BE IN WRITING.
9. PAVED AREAS AT THE ACCESS POINTS SHALL BE SWEPT OR VACUUMED AS OFTEN AS EACH DAY TO ELIMINATE TRACKING SOIL AND DEBRIS ONTO THE PUBLIC STREETS. ANY SOILS AND/OR DEBRIS, ROCK, GRAVEL, ETC. TRACKED ONTO PUBLIC STREET AS A RESULT OF THIS PROJECT SHALL BE REMOVED IMMEDIATELY. PAVED AREAS WITHIN THE RIGHT OF WAY SHALL BE LEFT IN A CLEANED CONDITION AT THE END OF EACH WORK DAY.
10. ALL UNDERGROUND IMPROVEMENTS SHALL BE INSTALLED TESTED AND APPROVED PRIOR TO PAVING.
11. THE CONTRACTOR SHALL NOT BEGIN EXCAVATING UNTIL ALL EXISTING UTILITIES HAVE BEEN MARKED IN THE FIELD. THE CONTRACTOR SHALL NOTIFY EACH APPLICABLE ENTITY AT LEAST 48 HOURS PRIOR TO COMMENCING WORK. CALL UNDERGROUND SERVICE ALERT (USA) TWO WORKING DAYS BEFORE DIGGING AT (800) 227-2600 FOR LOCATES.
12. GRADING AND CONSTRUCTION CONTRACTORS SHALL STOP WORK IF CULTURAL RESOURCES ARE DISCOVERED DURING CONSTRUCTION.
13. THE CONTRACTOR SHALL GIVE THE INSPECTOR 48 HOURS ADVANCE NOTICE OF ANY CONSTRUCTION OR REQUIRED TESTING.
14. THE CONTRACTOR SHALL NOT ALLOW ANY CONSTRUCTION DEBRIS TO ENTER THE STORM DRAIN OR SANITARY SEWER SYSTEMS. THE CONTRACTOR SHALL INSTALL APPROVED PHYSICAL BARRIERS TO ENSURE THAT ALL DEBRIS IS CAPTURED AND REMOVED FROM SURFACE RUNOFF PRIOR TO RELEASING SITE RUNOFF.
15. SHOULD THE CONTRACTOR OR ANY OF HIS AGENTS OR EMPLOYEES ENCOUNTER OR DISCOVER MATERIALS WHICH APPEAR TO BE HAZARDOUS DURING THE PERFORMANCE OF THE WORK, THE CONTRACTOR SHALL INFORM THE ENGINEER IMMEDIATELY AND SUSPEND WORK IN THE AFFECTED AREA UNTIL THE ENGINEER HAS INSPECTED THE LOCATION AND MATERIALS IN QUESTION. SHOULD IT BE NECESSARY TO UNDERTAKE REMEDIATION, THE ENGINEER WILL GIVE WRITTEN NOTICE TO SUSPEND WORK IN THE AFFECTED AREA UNTIL THE PROPER COURSE OF ACTION HAS BEEN DETERMINED. OPERATIONS IN THE AFFECTED AREA SHALL BE RESUMED ONLY UPON WRITTEN NOTICE BY THE ENGINEER.
16. SURFACE SLOPES OF ACCESSIBLE PARKING SPACES AND ACCESS AISLES SHALL NOT EXCEED ONE UNIT VERTICAL IN 50 UNITS HORIZONTAL (2% SLOPE) IN ANY DIRECTION.
17. ALL SITE GRADING WILL BE INSPECTED BY THE ENGINEER. COMPACTION TESTING WILL BE CONDUCTED AFTER SUFFICIENT DENSITIES HAVE BEEN ACHIEVED IN THE CONTRACTOR'S OPINION. THE CONTRACTOR SHALL MAKE ALL REQUESTS FOR MATERIALS TESTING AT LEAST 48 HOURS IN ADVANCE. ANY SOILS THAT FAIL TO MEET THE REQUIRED COMPACTION LEVELS SHALL BE REMOVED, AND RECOMPACTED. ALL COSTS ASSOCIATED WITH ACHIEVING COMPACTION STANDARDS SHALL BE INCLUDED IN THE CONTRACTOR'S ORIGINAL BID.
18. THE TOPSOIL SHALL BE REMOVED FROM CUT AND FILL AREAS AND SHALL NOT BE USED FOR ENGINEERED FILL. TOPSOIL SHALL BE STOCKPILED SEPARATELY AND REPLACED OVER AREAS OF EXPOSED SUBGRADE TO A MINIMUM DEPTH OF 6 INCHES.
19. ALL AREAS REQUIRING ASPHALT PAVING SHALL CONFORM TO THE REQUIREMENTS IN THE SPECIFICATIONS FOR ROADWAY CONSTRUCTION.
20. ALL SIDEWALKS AND WALKWAYS SHALL HAVE A GRADE OF LESS THAN 5% AND A MAXIMUM CROSS SLOPE OF 2%.
21. NO CHANGES OR MODIFICATIONS SHALL BE MADE TO THESE PLANS WITHOUT WRITTEN APPROVAL BY THE ENGINEER.

SURVEY NOTES:

BASIS OF COORDINATES AND ELEVATIONS:
COORDINATES AND ELEVATIONS ARE ASSUMED CALIFORNIA STATE PLANE COORDINATES (NAD83 CORS) & NORTH AMERICAN VERTICAL DATUM OF 1988 (NAVD 88) BASED ON INFORMATION PROVIDED BY LACO ASSOCIATES.

PROJECT CONTROL:
CP #96 NORTHING 2120539.26 EASTING 5947940.18 ELEVATION 255.89 MAG NAIL AND FLAGGING NEAR THE NORTH EDGE OF THE ALLEY, APPROX. 185 FEET NORTHEASTERLY OF THE INTERSECTION OF BRENARD ROAD AND CARROLL ROAD.
CP #100 NORTHING 2120505.92 EASTING 5947244.31 ELEVATION 227.49 CONCRETE NAIL AND SHINER ON THE WEST SIDE OF THE BULB-OUT, APPROX. 415 FEET SOUTHERLY OF THE EXISTING TERMINUS OF BOWIE ROAD.

EROSION CONTROL NOTES:

1. BMP'S TO BE INSTALLED PRIOR TO SITE BEING DISTURBED AND MAINTAINED SUCH THAT NO VISIBLE SEDIMENT LEAVES THE SITE.
2. TRACKING CONTROLS: ENTRANCE/EXIT.
3. DISTURBED AREAS PROTECTED TO EXTENT PRACTICAL DURING CONSTRUCTION.
4. STOCKPILE MANAGEMENT TO BE IMPLEMENTED.
5. DISTURBED AREA STABILIZED AS SOON AS POSSIBLE.
6. SEE SHEET C-8 FOR MORE EROSION CONTROL NOTES.

PRELIMINARY

VERIFY SCALES
BAR IS ONE INCH ON ORIGINAL DRAWING
0 1"
IF NOT ONE INCH ON THIS SHEET, ADJUST SCALES ACCORDINGLY

CONSULTING ENGINEERS & GEOLOGISTS, INC.
812 W. WABASH AVE.
EUREKA, CA. 95501
WWW.SHN-ENGR.COM
707-441-8855

NO.	DATE	REVISION	BY

DSGN JSO
DR NMD
CHK TJT
APVD

BEAR RIVER BAND OF ROHNERVILLE RANCHERIA
BEAR RIVER TOBACCO TRADERS
LOLETA, CALIFORNIA

GENERAL NOTES

SHEET G-3
SEQ 3
DATE 11/2013
PROJ. NO. 013144

SAVED: 11/4/2013 4:54 PM JOBARR, PLOTTED: 11/4/2013 4:57 PM JARED O'BARR
\\Eureka\projects\2013\013144-Tish-Non-Tobacco\Dwgs\013144-NOTES.dwg

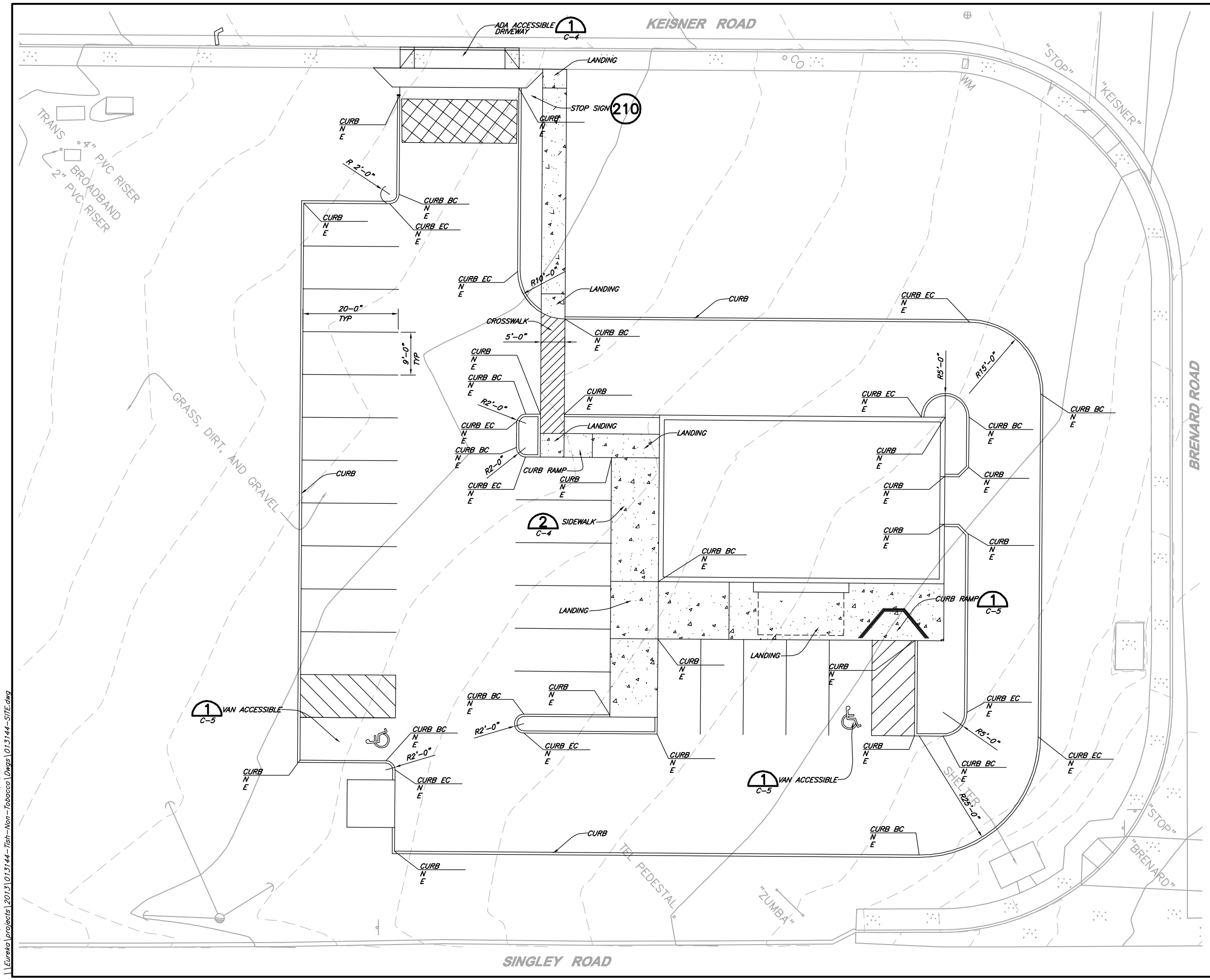

PLAN
1"=20'

PRELIMINARY

VERIFY SCALES
BAR IS ONE INCH ON ORIGINAL DRAWING
0 1"
IF NOT ONE INCH ON THIS SHEET, ADJUST SCALES ACCORDINGLY

SHN
CONSULTING ENGINEERS & GEOLOGISTS, INC.
812 W. WABASH AVE.
EUREKA, CA. 95501
WWW.SHN-ENGR.COM
707-441-8855

NO.	DATE	REVISION	BY

DSGN JSO
DR NMD
CHK TJT
APVD

BEAR RIVER BAND OF ROHNERVILLE RANCHERIA
BEAR RIVER TOBACCO TRADERS
LOLETA, CALIFORNIA

SITE PLAN

SHEET C-1
SEQ 4
DATE 11/2013
PROJ. NO. 013144

SAVED: 11/4/2013 4:54 PM JOBARR, PLOTTED: 11/4/2013 4:58 PM JARED O'BARR
\\Eureka\projects\2013\013144-Tish-Non-Tobacco\Dwgs\013144-SITE.dwg

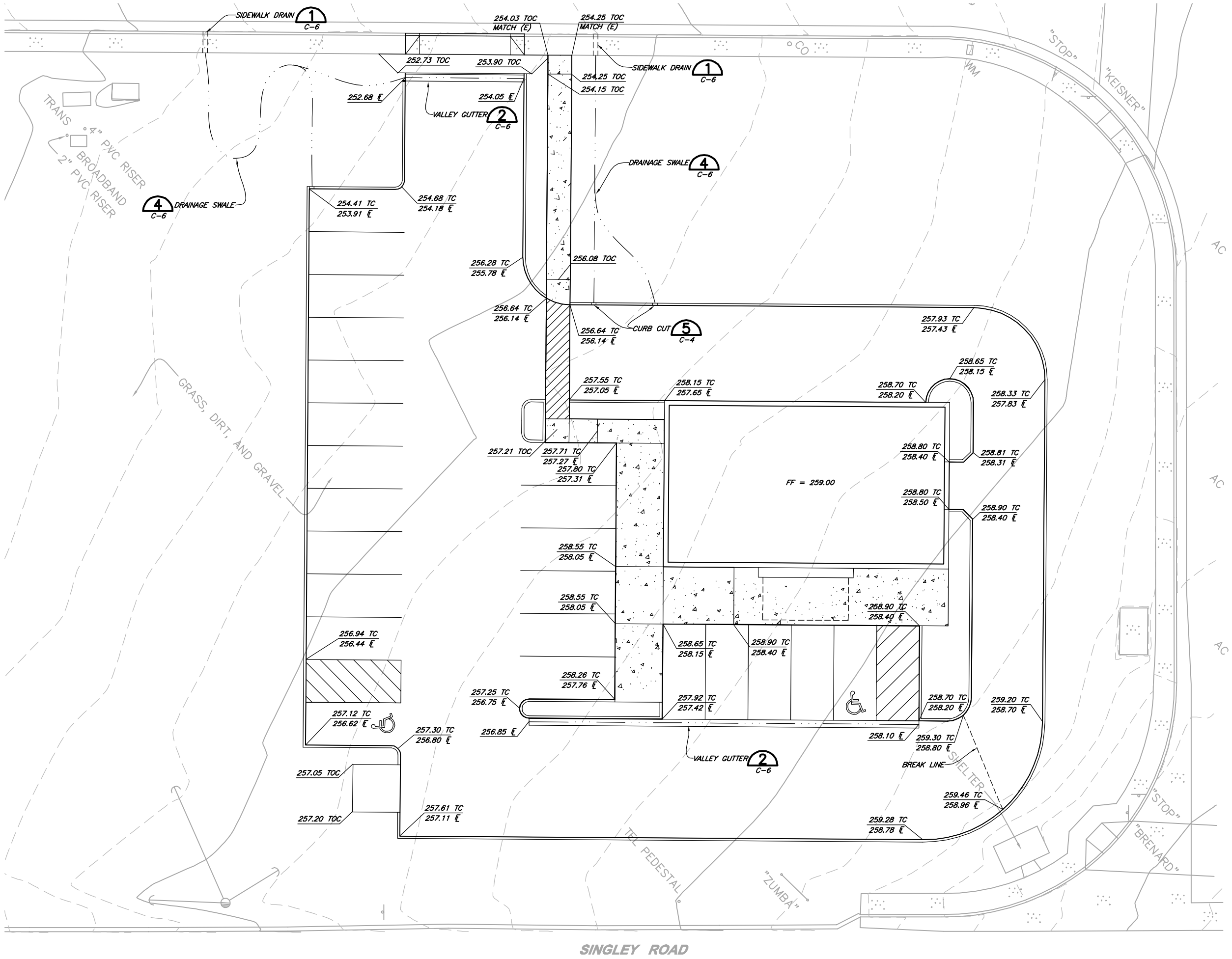

PRELIMINARY

VERIFY SCALES

BAR IS ONE INCH ON ORIGINAL DRAWING
0 1"

IF NOT ONE INCH ON THIS SHEET, ADJUST SCALES ACCORDINGLY

SHN CONSULTING ENGINEERS & GEOLOGISTS, INC.
812 W. WABASH AVE.
EUREKA, CA. 95501
WWW.SHN-ENGR.COM
707-441-8855

NO.	DATE	REVISION	BY

DSGN JSO
DR NMD
CHK TJT
APVD

BEAR RIVER BAND OF ROHNERVILLE RANCHERIA
BEAR RIVER TOBACCO TRADERS
LOLETA, CALIFORNIA

GRADING PLAN

SHEET C-2
SEQ 5
DATE 11/2013
PROJ. NO. 013144

SAVED: 11/4/2013 5:00 PM JOBARR, PLOTTED: 11/4/2013 5:00 PM JARED O'BARR
\\Eureka\projects\2013\013144-Tish-Non-Tobacco\Dwgs\013144-GRDG.dwg

KEISNER ROAD

SEWER TIE-IN ±252.00

WATER METER

"STOP"

"KEISNER"

TRANS

4" PVC RISER

BROADBAND

2" PVC RISER

DESIGN BY OTHERS

4"

1"

254.50'

GRASS, DIRT, AND GRAVEL

(E) PG&E UTILITY CORRIDOR

FF = 259.00

KEISNER ROAD

SHELTER

"STOP"

"BRENARD"

TEL PEDESTAL

"ZUMBA"

SINGLEY ROAD

1"=20'

PRELIMINARY

VERIFY SCALES

BAR IS ONE INCH ON ORIGINAL DRAWING

0 1"

IF NOT ONE INCH ON THIS SHEET, ADJUST SCALES ACCORDINGLY

CONSULTING ENGINEERS & GEOLOGISTS, INC.

812 W. WABASH AVE.
EUREKA, CA. 95501

WWW.SHN-ENGR.COM
707-441-8855

NO.	DATE	REVISION	BY

DSGN JSO
DR NMD
CHK TJT
APVD

BEAR RIVER BAND OF ROHNERVILLE RANCHERIA
BEAR RIVER TOBACCO TRADERS
LOLETA, CALIFORNIA

UTILITY PLAN

SHEET C-3

SEQ 6

DATE 11/2013

PROJ. NO. 013144

SAVED: 11/4/2013 4:53 PM JOBARR, PLOTTED: 11/4/2013 5:00 PM JARED O'BARR
\\Eureka\projects\2013\013144-Tish-Non-Tobacco\Dwgs\013144-UTIL.dwg

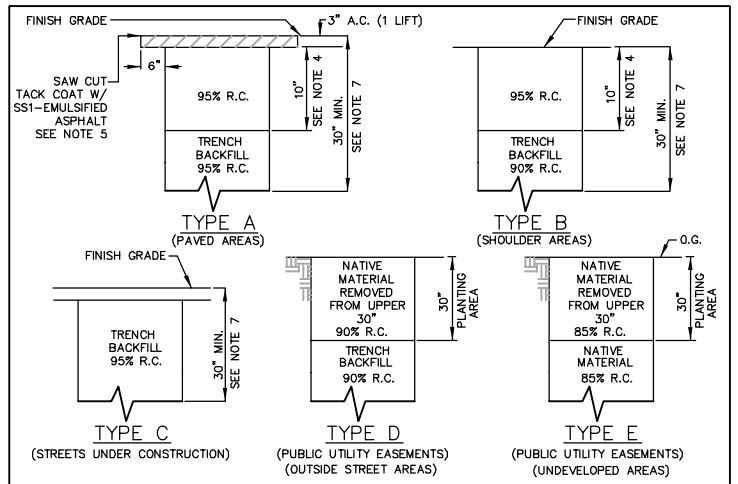

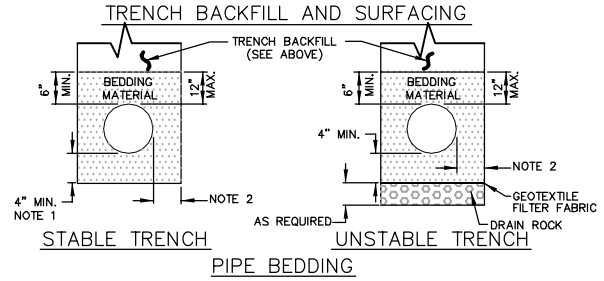

NOTES:

1. 1/4 PIPE O.D. OR 4" MIN. WHEN EXCAVATION IS IN ROCKY GROUND.
2. PIPE DIAMETER 18" OR LESS: 6" MIN., 9" MAX/PIPE DIA. GREATER THAN 18": 9" MIN., 12" MAX.
3. RELATIVE COMPACTION DESIGNATED R.C.
4. THE MINIMUM STREET STRUCTURAL SECTION SHALL BE 3" A.C. ON 10" A.B. OR MATCH EXISTING PAVEMENT, WHICHEVER IS THICKER, SPECIFIED ON PLANS, OR REQUIRED BY ENCROACHMENT PERMIT.
5. SAW CUT PAVEMENT SIX INCHES FROM EDGE OF TRENCH AFTER TRENCH IS BACKFILLED.
6. MINIMUM PIPE COVER SHALL BE 36" FROM TOP OF PIPE.
7. NEW STREETS AND SHOULDER AREAS UNDER CONSTRUCTION SHALL BE COMPACTED TO 95% RELATIVE COMPACTION FOR A MINIMUM DEPTH OF 30" PER CALTRANS SECTION 19-5.03.
8. INSTALL #12 COPPER COATED TRACER WIRE ON/OVER ALL NON-METALLIC MAINS.

HUMBOLDT COMMUNITY SERVICES DISTRICT	WATER AND SEWER STANDARD TRENCH DETAILS	APPROVED DATE: 6-96 STD. DWG. SS-200A

DETAIL 3 NTS C-3

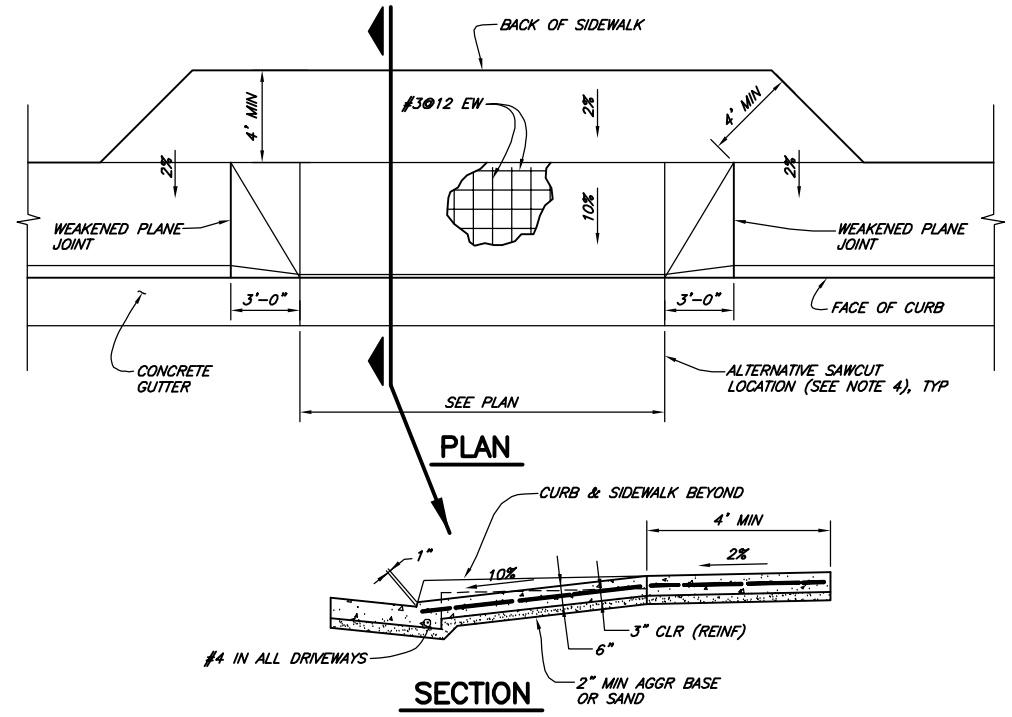

NOTES:

1. MAXIMUM CROSS SLOPE IS 2% PER ADA BUILD FORMS TO 1.5% TO ENSURE SLOPE DOES NOT EXCEED 2%.
2. DRIVEWAYS MUST TRANSITION TO FULL HEIGHT OF CURB BEFORE NEXT DRIVEWAY (CONTINUOUS DRIVEWAYS NOT PERMITTED).
3. UNDER SPECIAL CONDITIONS, WHEN APPROVED BY THE HUMBOLDT COUNTY DEPARTMENT OF PUBLIC WORKS, DRIVEWAY GRADES MAY BE GREATER THAN 10%. AN ENGINEERED PROFILE IS REQUIRED TO ENSURE DRIVABILITY.
4. REMOVE TO NEAREST EXPANSION JOINT, OR SAWCUT AT ALTERNATIVE LOCATION AS SHOWN IF EXPANSION JOINT IS GREATER THAN 5'-0" FROM DRIVEWAY.

DETAIL 1 NTS C-1

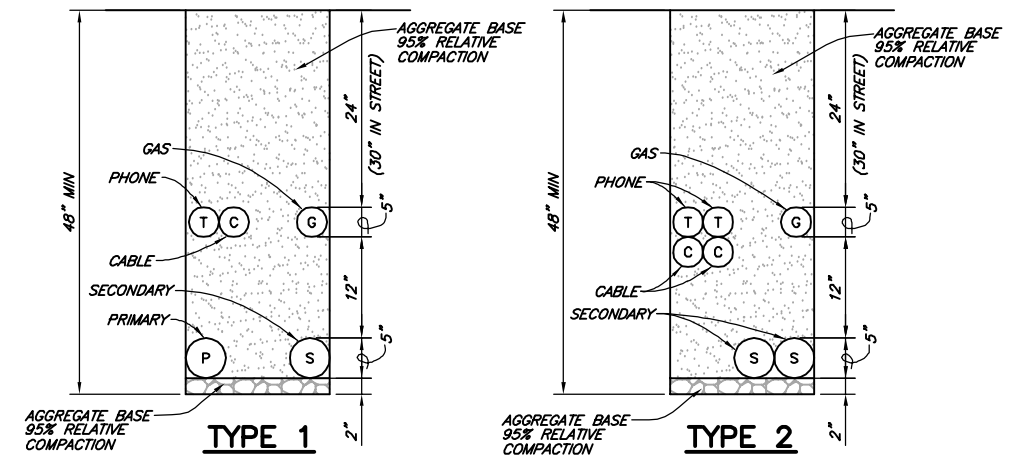

DETAIL 4 NTS C-3

THICKNESS

"T1"	"T2"
0.3	1.0

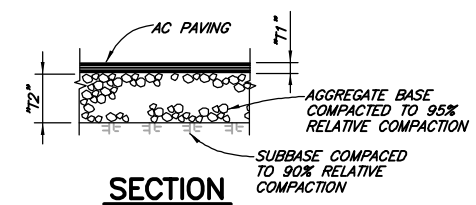

TYPICAL PAVING STRUCTURAL SECTION 202
NTS

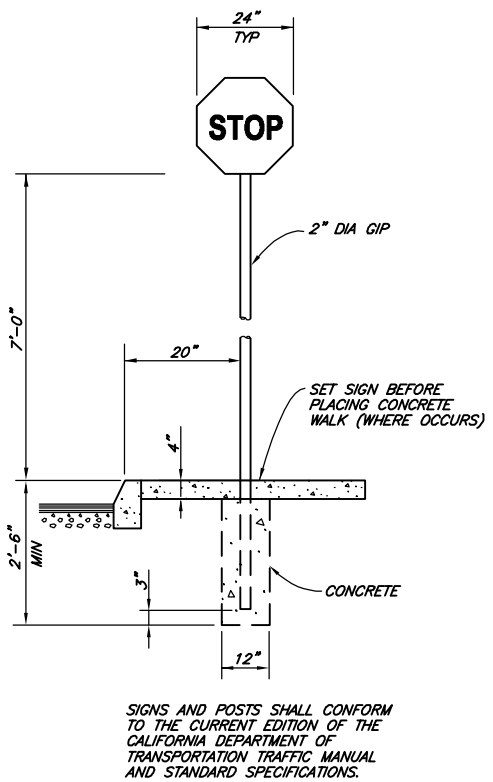

STOP SIGN MOUNTING 198
NTS

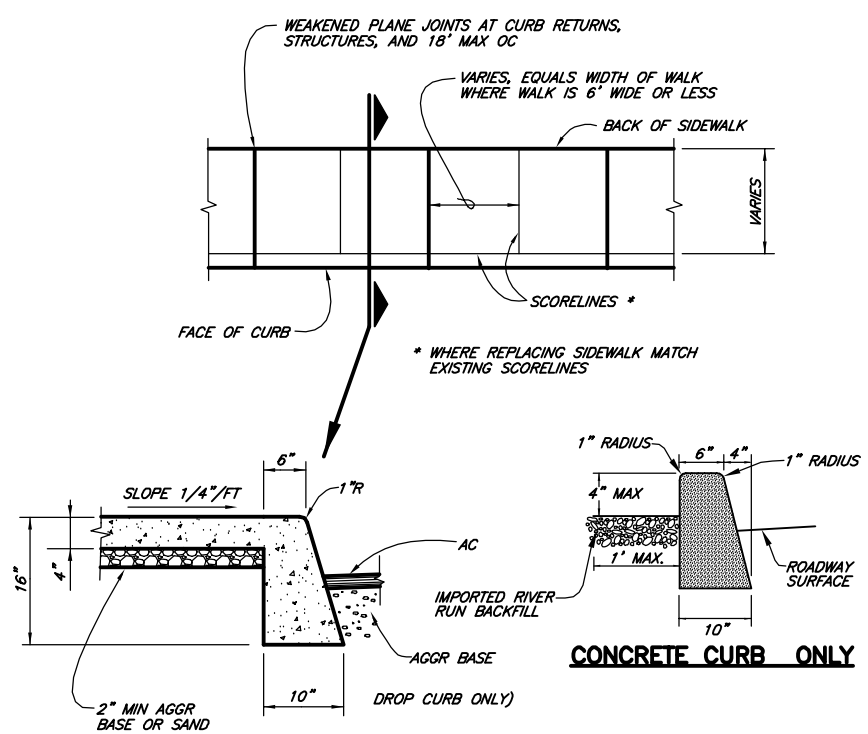

DETAIL 2 NTS C-1

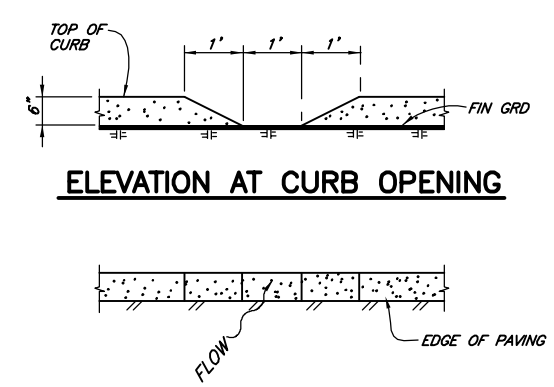

DETAIL 5 NTS C-1

PRELIMINARY

VERIFY SCALES
BAR IS ONE INCH ON ORIGINAL DRAWING
0 1"
IF NOT ONE INCH ON THIS SHEET, ADJUST SCALES ACCORDINGLY

CONSULTING ENGINEERS & GEOLOGISTS, INC.
812 W. WABASH AVE. EUREKA, CA. 95501
WWW.SHN-ENGR.COM 707-441-8855

NO.	DATE	REVISION	BY

DSGN JSO
DR NMD
CHK TJT
APVD

BEAR RIVER BAND OF ROHNERVILLE RANCHERIA
BEAR RIVER TOBACCO TRADERS
LOLETA, CALIFORNIA

DETAILS

SHEET C-4
SEQ 7
DATE 11/2013
PROJ. NO. 013144

SAVED: 11/4/2013 3:54 PM NDOWNEY, PLOTTED: 11/4/2013 5:01 PM JARED O'BARR
\\Eureka\projects\2013\013144-Tish-Non-Tobacco\Dwgs\013144-DETLS.dwg

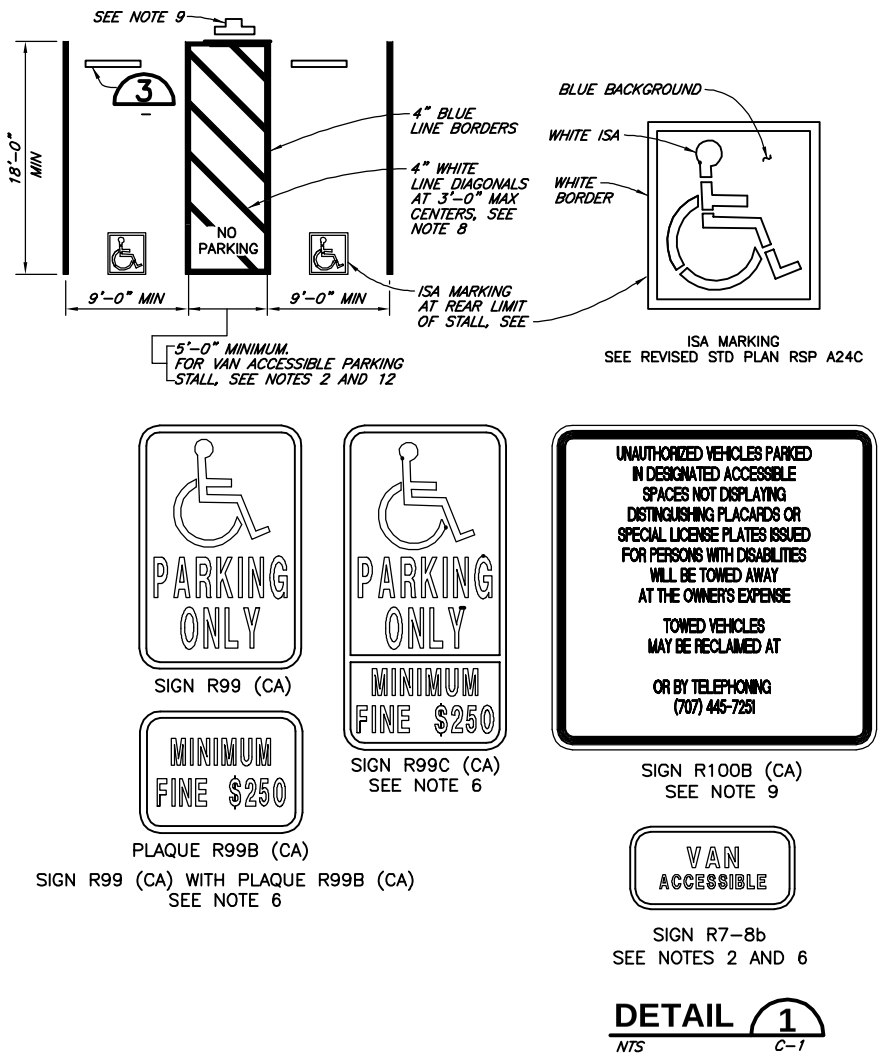

DETAIL 1

NTS C-1

NOTES:

1. ACCESSIBLE PARKING SPACES SERVING A PARTICULAR BUILDING SHALL BE LOCATED ON THE SHORTEST ACCESSIBLE ROUTE OF TRAVEL FROM ADJACENT PARKING TO AN ACCESSIBLE ENTRANCE. IN PARKING FACILITIES THAT DO NOT SERVE A PARTICULAR BUILDING, ACCESSIBLE PARKING SHALL BE LOCATED ON THE SHORTEST ACCESSIBLE ROUTE OF TRAVEL TO AN ACCESSIBLE PEDESTRIAN ENTRANCE OF THE PARKING FACILITY.
2. ONE IN EVERY EIGHT ACCESSIBLE OFF-STREET PARKING STALLS, BUT NOT LESS THAN ONE, SHALL BE SERVED BY AN ACCESSIBLE AISLE OF 8'-0" MINIMUM WIDTH AND SHALL BE SIGNED VAN ACCESSIBLE. THE R7-8B SIGN SHALL BE MOUNTED BELOW THE R99B (CA) PLAQUE OR THE R99C (CA) SIGN.
3. IN EACH PARKING STALL, A CURB OR BUMPER SHALL BE PROVIDED AND LOCATED TO PREVENT ENCROACHMENT OF VEHICLES OVER THE REQUIRED WIDTH OF WALKWAYS. PARKING STALLS SHALL BE SO LOCATED THAT PERSONS WITH DISABILITIES ARE NOT COMPELLED TO WHEEL OR WALK BEHIND PARKED CARS OTHER THAN THEIR OWN.
4. SURFACE SLOPES OF ACCESSIBLE OFF-STREET PARKING STALLS SHALL BE THE MINIMUM POSSIBLE AND SHALL NOT EXCEED 2 PERCENT IN ANY DIRECTION.
5. WHERE PLAQUE R99B (CA), SIGN R99C (CA) OR SIGN R7-8B ARE INSTALLED, THE BOTTOM OF THE SIGN OR PLAQUE PANEL SHALL BE A MINIMUM OF 7'-0" ABOVE THE SURROUNDING SURFACE.
6. CURB RAMPS SHALL CONFORM TO THE DETAILS SHOWN ON REVISED STANDARD PLAN RSP A88A.
7. BLUE PAINT, INSTEAD OF WHITE MAY BE USED FOR MARKING ACCESSIBILITY AISLES IN AREAS WHERE SNOW MAY CAUSE WHITE MARKINGS TO NOT BE VISIBLE.
8. THE WORDS "NO PARKING" SHALL BE PAINTED IN WHITE LETTERS NO LESS THAN 1'-0" HIGH AND LOCATED SO THAT IT IS VISIBLE TO TRAFFIC ENFORCEMENT OFFICIALS. SEE REVISED STANDARD PLAN RSP A90B FOR DETAILS OF THE "NO PARKING" PAVEMENT MARKING.
9. A R100B (CA) SIGN SHALL BE POSTED IN A CONSPICUOUS PLACE AT EACH ENTRANCE TO OFF-STREET PARKING FACILITIES OR IMMEDIATELY ADJACENT TO AND VISIBLE FROM EACH STALL. THE SIGN SHALL INCLUDE THE ADDRESS WHERE THE TOWED VEHICLE MAY BE RECLAIMED AND THE TELEPHONE NUMBER OF THE LOCAL TRAFFIC LAW ENFORCEMENT AGENCY.
10. WHERE A SINGLE (NON-VAN) ACCESSIBLE PARKING SPACE IS PROVIDED, THE LOADING AND UNLOADING ACCESS AISLE SHALL BE ON THE PASSENGER SIDE OF THE VEHICLE AS THE VEHICLE IS GOING FORWARD INTO THE PARKING SPACE.
11. WHERE A VAN ACCESSIBLE PARKING SPACE IS PROVIDED, THE LOADING AND UNLOADING ACCESS AISLE SHALL BE 8'-0" WIDE MINIMUM, AND SHALL BE ON THE PASSENGER SIDE OF THE VEHICLE AS THE VEHICLE IS GOING FORWARD INTO THE PARKING SPACE.
12. ACCESSIBLE PARKING ONLY SIGN SHALL BE SIGN R99C (CA) OR SIGN R99 (CA) WITH PLAQUE R99B (CA).

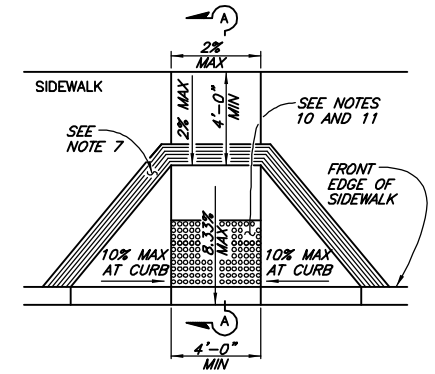

CASE A

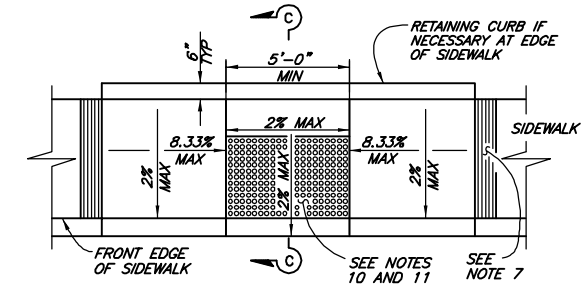

CASE C

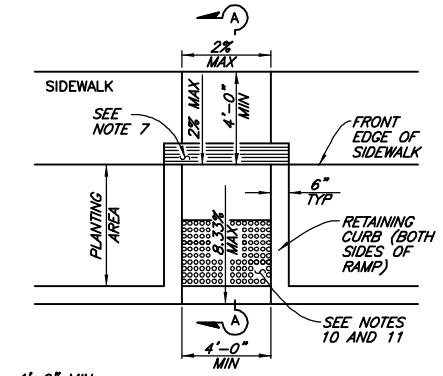

CASE F

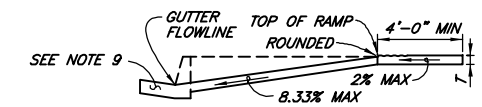

SECTION A–A

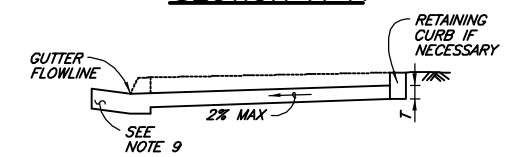

SECTION C–C

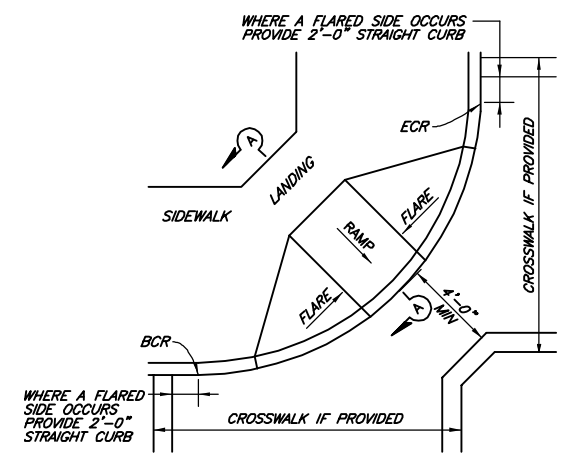

DETAIL B

TYPICAL ONE-RAMP CORNER INSTALLATION

See Notes 1 and 3

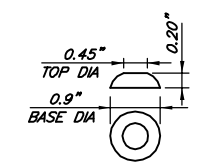

RAISED TRUNCATED DOME

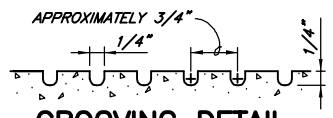

GROOVING DETAIL

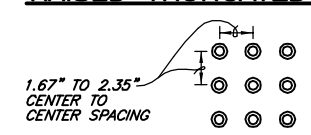

RAISED TRUNCATED DOME PATTERN (IN-LINE)

DETECTABLE WARNING SURFACE

NOTES:

1. AS SITE CONDITIONS DICTATE, CASE A, CASE C OR CASE F CURB RAMPS MAY BE USED FOR CORNER INSTALLATIONS SIMILAR TO THOSE SHOWN IN DETAIL B. THE CASE OF CURB RAMPS USED IN DETAIL A DO NOT HAVE TO BE THE SAME. CASE A THROUGH CASE G CURB RAMPS ALSO MAY BE USED AT MID BLOCK LOCATIONS, AS SITE CONDITIONS DICTATE.
2. IF DISTANCE FROM CURB TO BACK OF SIDEWALK IS TOO SHORT TO ACCOMMODATE RAMP AND 4'-0" PLATFORM (LANDING) AS SHOWN IN CASE A, THE SIDEWALK MAY BE DEPRESSED LONGITUDINALLY, AS IN CASE C.
3. WHEN RAMP IS LOCATED IN CENTER OF CURB RETURN, CROSSWALK CONFIGURATION MUST BE SIMILAR TO THAT SHOWN FOR DETAIL B.
4. NOT USED.
5. IF LOCATED ON A CURVE, THE SIDES OF THE RAMP NEED NOT BE PARALLEL, BUT THE MINIMUM WIDTH OF THE RAMP SHALL BE 4'-0".
6. SIDE SLOPE OF RAMP FLARES VARY UNIFORMLY FROM A MAXIMUM OF 10% AT CURB TO CONFORM WITH LONGITUDINAL SIDEWALK SLOPE ADJACENT TO TOP OF THE RAMP, EXCEPT IN CASE C.
7. THE CURB RAMP SHALL BE OUTLINED, AS SHOWN, WITH A 1'-0" WIDE BORDER WITH ¼" GROOVES APPROXIMATELY ¼" ON CENTER. SEE GROOVING DETAIL.
8. TRANSITIONS FROM RAMPS AND LANDING TO WALKS, GUTTERS OR STREETS SHALL BE FLUSH AND FREE OF ABRUPT CHANGES.
9. MAXIMUM SLOPES OF ADJOINING GUTTERS, THE ROAD SURFACE IMMEDIATELY ADJACENT TO THE CURB RAMP OR ACCESSIBLE ROUTE SHALL NOT EXCEED 5 PERCENT WITHIN 4'-0" OF THE TOP AND BOTTOM OF THE CURB RAMP.
10. CURB RAMPS SHALL HAVE A DETECTABLE WARNING SURFACE THAT EXTENDS THE FULL WIDTH AND 3'-0" DEPTH OF THE RAMP. DETECTABLE WARNING SURFACES SHALL CONFORM TO THE DETAILS ON THIS PLAN AND THE REQUIREMENTS IN THE SPECIAL PROVISIONS.
11. THE EDGE OF THE DETECTABLE WARNING SURFACE NEAREST THE STREET SHALL BE BETWEEN 6" AND 8" FROM THE GUTTER FLOWLINE.
12. SIDEWALK AND RAMP THICKNESS, "T", SHALL BE 3 1/2" MINIMUM.
13. UTILITY PULL BOXES, MANHOLES, VAULTS AND ALL OTHER UTILITY FACILITIES WITHIN THE BOUNDARIES OF THE CURB RAMP WILL BE RELOCATED OR ADJUSTED TO GRADE BY THE OWNER PRIOR TO, OR IN CONJUNCTION WITH, CURB RAMP CONSTRUCTION.
14. FOR RETROFIT CONDITIONS, REMOVAL AND REPLACEMENT OF CURB APRON WILL BE AT THE CONTRACTOR'S OPTION, UNLESS OTHERWISE SHOWN ON PROJECT PLANS.

DETAIL 2

NTS C-1

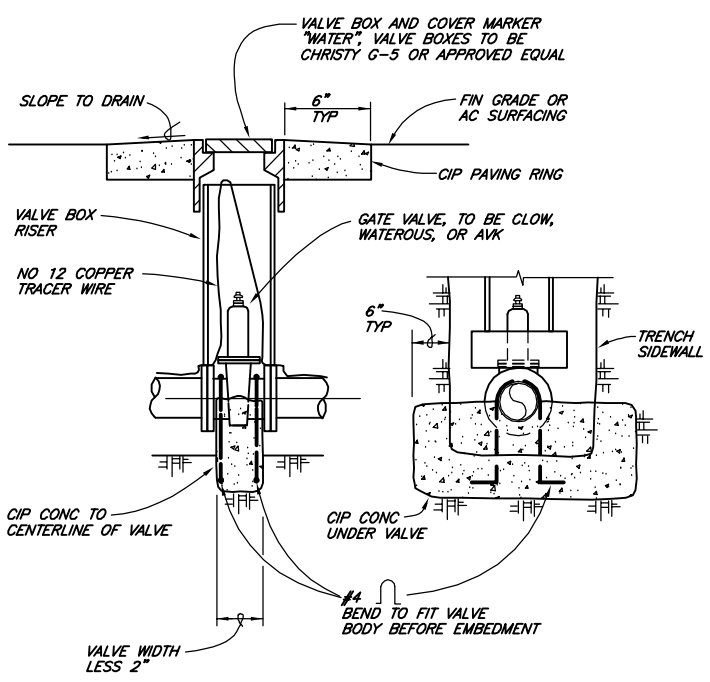

GATE VALVE INSTALLATION 085

NTS

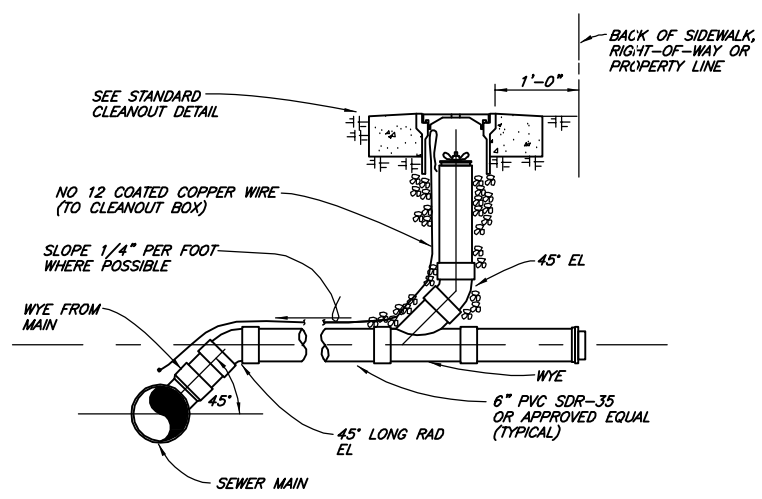

SINGLE SERVICE LATERAL

STANDARD SEWER LATERAL 157

NTS

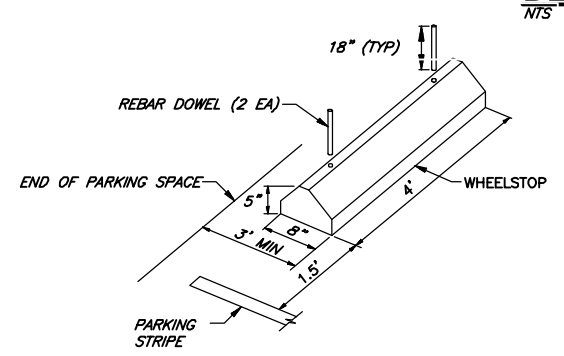

DETAIL 3

NTS –

PRELIMINARY

VERIFY SCALES
BAR IS ONE INCH ON ORIGINAL DRAWING
0 1"
IF NOT ONE INCH ON THIS SHEET, ADJUST SCALES ACCORDINGLY

SHN CONSULTING ENGINEERS & GEOLOGISTS, INC.
812 W. WABASH AVE. EUREKA, CA. 95501
WWW.SHN-ENGR.COM 707-441-8855

NO.	DATE	REVISION	BY

DSGN JSO
DR NMD
CHK TJT
APVD

BEAR RIVER BAND OF ROHNERVILLE RANCHERIA
BEAR RIVER TOBACCO TRADERS
LOLETA, CALIFORNIA

DETAILS

SHEET C-5
SEQ 8
DATE 11/2013
PROJ. NO. 013144

SAVED: 11/4/2013 3:54 PM NDONNEY, PLOTTED: 11/4/2013 5:02 PM JARED O'BARR
\\Eureka\projects\2013\013144-Tish-Non-Tobacco\Dwgs\013144-DETLS.dwg

SAVED: 11/4/2013 3:54 PM NDOWNEY, PLOTTED: 11/4/2013 5:03 PM JARED O'BARR
\\Eureka\projects\2013\013144-Tsih-Non-Tobacco\Dwgs\013144-DETLS.dwg

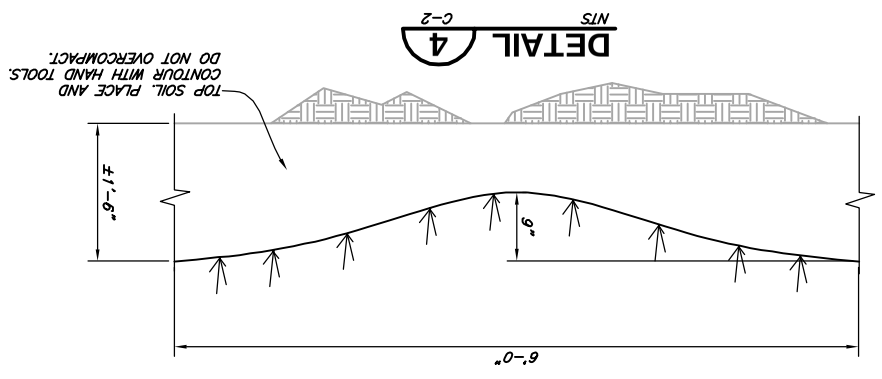

DETAIL 4 C-2
NTS

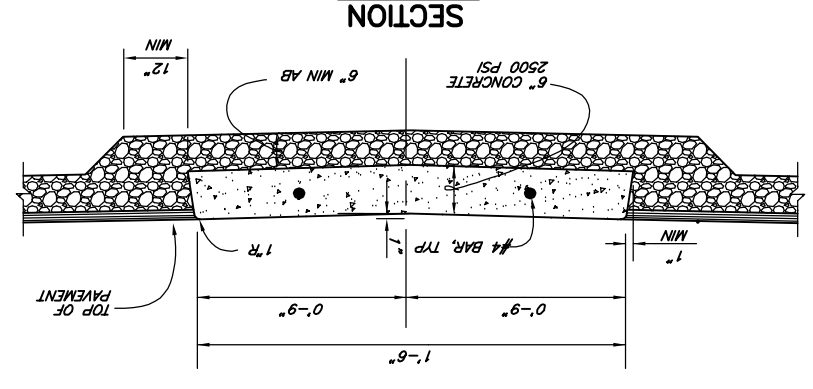

SECTION

DETAIL 2 C-2
NTS

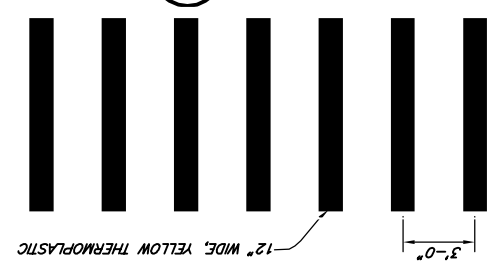

DETAIL 3 C-1
NTS

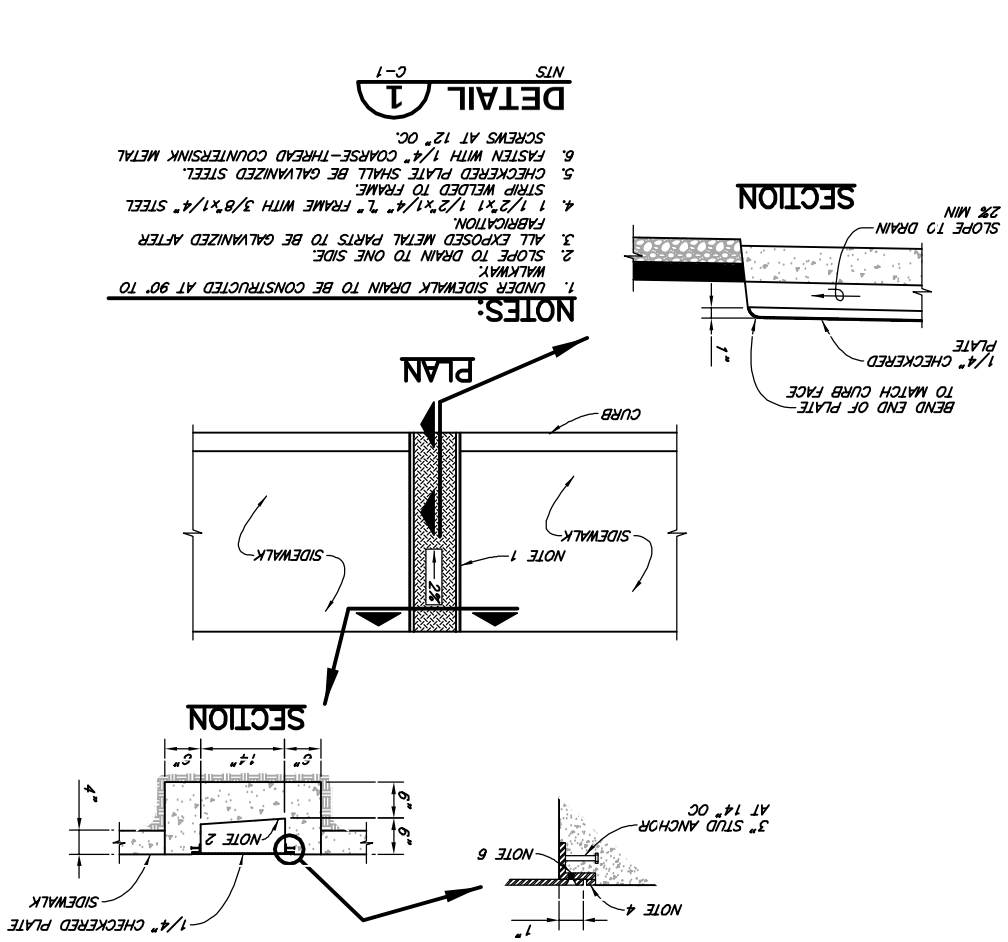

NOTES:
1. UNDER SIDEWALK DRAIN TO BE CONSTRUCTED AT 90° TO WALKWAY.
2. SLOPE TO DRAIN TO ONE SIDE.
3. ALL EXPOSED METAL PARTS TO BE GALVANIZED AFTER FABRICATION.
4. 1 1/2"x1 1/2"x1/4" 2" FRAME WITH 3/8"x1/4" STEEL STRIP WELDED TO FRAME
5. CHECKERED PLATE SHALL BE GALVANIZED STEEL.
6. FASTEN WITH 1/4" COARSE-THREAD COUNTERSINK METAL SCREWS AT 12" OC.

DETAIL 1 C-1
NTS

PRELIMINARY

SHEET	SEQ	DATE	PROJ. NO.
C-6	9	11/2013	013144

BEAR RIVER BAND OF ROHNERVILLE RANCHERIA
BEAR RIVER TOBACCO TRADERS
LOLETA, CALIFORNIA

DETAILS

DSGN	JSO
DR	NMD
CHK	TJT
APV'D	

NO.	DATE	REVISION	BY

SHN
CONSULTING ENGINEERS & GEOLOGISTS, INC.
812 W. WABASH AVE.
EUREKA, CA. 95501
WWW.SHN-ENGR.COM
707-441-8855

VERIFY SCALES
BAR IS ONE INCH ON ORIGINAL DRAWING
0 1"
IF NOT ONE INCH ON THIS SHEET, ADJUST SCALES ACCORDINGLY